Vernier Depth Gauge
0-1000mm, 0,02mm, Fine adjustment
Item number: 527-105

Description

This vernier depth gauge offers you the following benefits:
- Its base and measuring faces are hardened and micro-lapped for robustness.
- Fine adjustment models available

Specification

Range:	**0 - 1000 mm**
Graduation:	**0,02 mm**
Base (W x T):	**250 x 10 mm**
Mass:	**1880 g**
Digital/Analog:	**Analog**
Accuracy:	**±0,07 mm**
Inch-Metric:	**Metric**

Dimensions

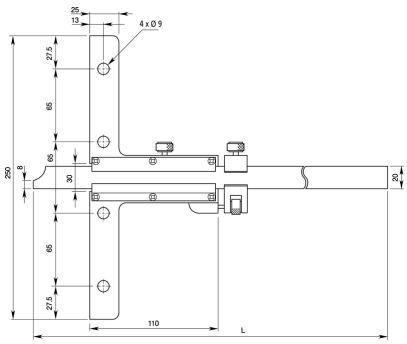

L: **1200 mm**

Accessories

Optional accessories:

Extension Base, Depth Gauge
180mm width for up to 300mm Range
900370
List Price
£42.72 inc. VAT
£35.60 ex. VAT

Extension Base, Depth Gauge
260mm width for up to 300mm Range
900371
List Price
£62.40 inc. VAT
£52.00 ex. VAT

Extension Base, Depth Gauge
320mm width for up to 300mm Range
900372

List Price

£75.00 inc. VAT

£62.50 ex. VAT