KERN & Sohn GmbH
Ziegelei 1
D-72336 Balingen
email: info@kern-sohn.com
Phone: +49-[0]7433- 9933-0
Fax: +49-[0]7433-9933-149
Internet: www.kern-sohn.com

Operating instructions
Platform/floor scales

KERN EOB / EOE_L / EOE_XL / EOS

Version 3.0
07/2010
GB

EOB/EOE_L/EOE_XL/EOS-BA-e-1030

GB

KERN EOB / EOE_L / EOE_XL / EOS

Version 3.0 07/2010

Operating instructions Platform/floor scales

English

Table of Contents

1 Technical Specifications 4

2 Appliance overview 9

2.1 Overview of displays 11

2.2 Keyboard overview 11

3 Basic Information (General) 12

3.1 Proper use 12

3.2 Improper Use 12

3.3 Warranty 12

3.4 Monitoring of Test Resources 13

4 Basic Safety Precautions 13

4.1 Pay attention to the instructions in the Operation Manual 13

4.2 Personnel training 13

5 Transportation & Storage 13

5.1 Testing upon acceptance 13

5.2 Packaging / return transport 13

6 Unpacking, Setup and Commissioning 14

6.1 Installation Site, Location of Use 14

6.2 Unpacking and placing 14

6.2.1 Scope of delivery / serial accessories 15

6.2.2 Assembly instructions for the use of the wall fixture 15

6.3 Mains connection 16

6.4 Battery operation 16

6.5 Initial Commissioning 16

7 Adjustment 17

8 Operation 18
Start-up 18
Switching Off 18
Weighing 18
Switch-over weighing unit 18
Taring 19
Hold function (animal weighing function) 20
Plus/minus weighing 21
9 Menu 22
10 Service, maintenance, disposal 23
10.1 Cleaning 23
10.2 Service, maintenance 23
10.3 Disposal 23
11 Error messages, troubleshooting guide 23

English

1 Technical Specifications

Models KERN EOB

KERN	EOB 15K5	EOB 35K10	EOB 60K20	EOB 60K20L
Readability (d)	5 g	10 g	20 g	20 g
Weighing range (max)	15 kg	35 kg	60 kg	60 kg
Reproducibility	5 g	10 g	20 g	20 g
Linearity	±10 g	±20 g	±40 g	±40 g
Recommended adjustment weight, not added (class)	10 kg (M2)	20 kg (M2)	40 kg (M2)	40 kg (M2)
Stabilization time (typical)	2.5 sec.			
Warm-up time	10 min			
Supply voltage	220 V- 240 V, AC 50 Hz			
Power pack secondary voltage	9V, 100 mA			
Battery	6 x 1.5 V AA (=9V)			
Battery operation period	220 h			
Auto-Off	3 min			
Weighing Units	kg, lb			
Ambient temperature	+ 10°C …+ 35°C			
Humidity of air	max. 80 % (not condensing)			
Display unit (B x D x H) mm	210 x 110 x 45			
Cable length display unit	180 cm	180 cm	180 cm	270 cm
Weighing surface mm	314.5 x 304.5			550 x 550
Weight kg (net)	4.2			13.5

English

English

KERN	EOB 150K50	EOB 150K50L	EOB 150K50XL
Readability (d)	50 g	50 g	50 g
Weighing range (max)	150 kg	150 kg	150 kg
Reproducibility	50 g	50 g	50 g
Linearity	±100 g	±100 g	±100 g
Recommended adjustment weight, not added (class)	100 kg (M2)	100 kg (M2)	100 kg (M2)
Stabilization time (typical)	2.5 sec.		
Warm-up time	10 min		
Supply voltage	220 V- 240 V, AC 50 Hz		
Power pack secondary voltage	9V, 100 mA		
Battery	6 x 1.5 V AA (=9V)		
Battery operation period	220 h		
Auto-Off	3 min		
Weighing Units	kg, lb		
Ambient temperature	+ 10°C …+ 35°C		
Humidity of air	max. 80 % (not condensing)		
Display unit (B x D x H) mm	210 x 110 x 45		
Cable length display unit	180 cm	270 cm	270 cm
Weighing surface mm	314.5 x 304.5	550 x 550	945 x 505
Weight kg (net)	4.2	13.5	19.5

KERN	EOB 300K100A	EOB 300K100L	EOB 300K100XL
Readability (d)	100 g	100 g	100 g
Weighing range (max)	300 kg	300 kg	300 kg
Reproducibility	100 g	100 g	100 g
Linearity	±200 g	±200 g	±200 g
Recommended adjustment weight, not added (class)	200 kg (M2)	200 kg (M2)	200 kg (M2)
Stabilization time (typical)	2.5 sec.		
Warm-up time	10 min.		
Supply voltage	220 V- 240 V, AC 50 Hz		
Power pack secondary voltage	9V, 100 mA		
Battery (optional)	6 x 1.5 V AA (=9V)		
Battery operation period	220 h		
Auto-Off	3 min		
Weighing Units	kg, lb		
Ambient temperature	+ 10°C …+ 35°C		
Humidity of air	max. 80 % (not condensing)		
Display unit (B x D x H) mm	210 x 110 x 45		
Cable length display unit	180 cm	270 cm	270 cm
Weighing surface mm	314.5 x 304.5	550 x 550	945 x 505
Weight kg (net)	4.2	13.5	19.5

English

Models KERN EOE

KERN	EOE 150K50L	EOE 150K50XL	EOE 300K100L	EOE 300K100XL
Readability (d)	50 g	50 g	100 g	100 g
Weighing range (max)	150 kg	150 kg	300 kg	300 kg
Reproducibility	50 g	50 g	100 g	100 g
Linearity	±100 g	±100 g	±200 g	±200 g
Recommended adjustment weight, not added (class)	100 kg (M2)	100 kg (M2)	200 kg (M2)	200 kg (M2)
Stabilization time (typical)	2.5 sec.			
Warm-up time	10 min.			
Supply voltage	220 V- 240 V, AC 50 Hz			
Power pack secondary voltage	9V, 100 mA			
Battery (optional)	6 x 1.5 V AA (=9V)			
Battery operation period	220 h			
Auto-Off	3 min			
Weighing Units	kg, lb			
Ambient temperature	+ 10°C …+ 35°C			
Humidity of air	max. 80 % (not condensing)			
Display unit (B x D x H) mm	210 x 110 x 45			
Cable length display unit	270 cm			
Weighing surface mm	505 x 505	945 x 505	505 x 505	945 x 505
Weight kg (net)	12.5	19.5	12.5	19.5

English

Models KERN EOS

KERN	EOS 150K50XL	EOS 300K100XL
Readability (d)	50 g	100 g
Weighing range (max)	150 kg	300 kg
Reproducibility	50 g	100 g
Linearity	±100 g	±200 g
Recommended adjustment weight, not added (class)	100 kg (M2)	200 kg (M2)
Stabilization time (typical)	2.5 sec.	
Warm-up time	10 min.	
Supply voltage	220 V- 240 V, AC 50 Hz	
Power pack secondary voltage	9V, 100 mA	
Battery (optional)	6 x 1.5 V AA (=9V)	
Battery operation period	220 h	
Auto-Off	3 min	
Weighing Units	kg, lb	
Ambient temperature	+ 10°C …+ 35°C	
Humidity of air	max. 80 % (not condensing)	
Display unit (B x D x H) mm	210 x 110 x 45	
Cable length display unit	270 cm	
Weighing surface mm	900 x 550	900 x 550
Weight kg (net)	18.8	18.8

English

2 Appliance overview

Models EOB

Weighing plate, stainless steel

Models EOE

Weighing plate varnished steel

Models EOS

- Weighing plate, stainless steel
- Anti-slip rubber mat

Comfortable transport due to 2 rollers and 1 grab handle

English

2.1 Overview of displays

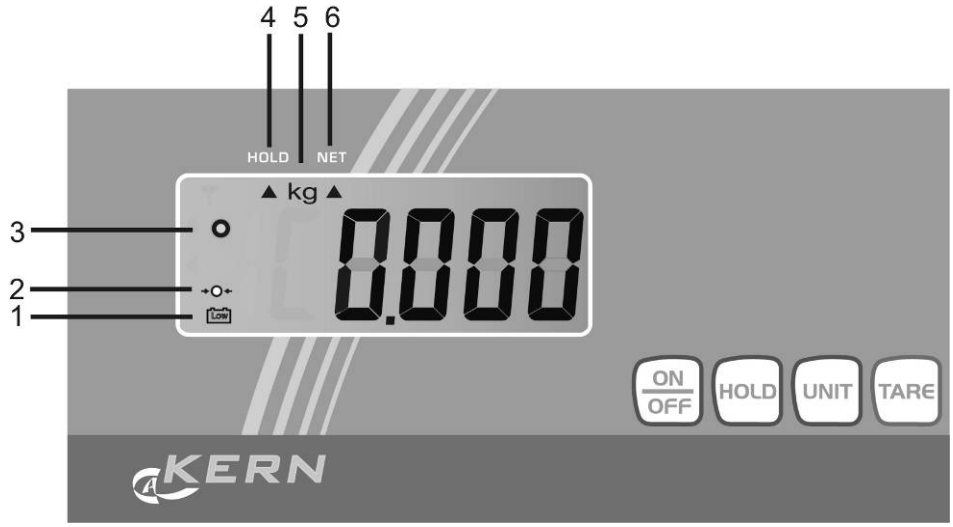

No.	Description
1	Is displayed, when the battery capacity is exhausted.
2	Balance zero display: Should the balance not display exactly zero despite empty scale pan, press the **TARE** button. The balance will be set to zero after a short standby time.
3	Stability display: If the display shows the stability display **[o]** the balance is in a stable status. The **[o]** indication disappears if the condition is unstable.
4	Hold/animal weighing function active, see chap. 9
5	Weighing unit **[kg ⇆ lb]**, see chap. 8 „Switch-over weighing unit“
6	Stored tare value, see chap. 8 „Taring“

2.2 Keyboard overview

Key	Function
ON OFF	Turn on/off balance
HOLD	Hold/ animal weighing function
TARE	Tare balance
UNIT	Switch-over weighing unit

English

3 Basic Information (General)

3.1 Proper use

The balance you purchased is intended to determine the weighing value of material to be weighed. It is intended to be used as a “non-automatic“ balance, i.e. the material to be weighed is manually and carefully placed in the centre of the weighing plate. As soon as a stable weighing value is reached the weighing value can be read.

3.2 Improper Use

Do not use balance for dynamic add-on weighing procedures, if small amounts of goods to be weighed are removed or added. The “stability compensation“ installed in the balance may result in displaying an incorrect measuring value! (Example: Slowly draining fluids from a container on the balance.)
Do not leave permanent load on the weighing plate. This may damage the measuring system.
Impacts and overloading exceeding the stated maximum load (max) of the balance, minus a possibly existing tare load, must be strictly avoided. Balance may be damage by this.
Never operate balance in explosive environment. The serial version is not explosion protected.
The structure of the balance may not be modified. This may lead to incorrect weighing results, safety-related faults and destruction of the balance.
The balance may only be used according to the described conditions. Other areas of use must be released by KERN in writing.

3.3 Warranty

Warranty claims shall be voided in case

- Our conditions in the operation manual are ignored
- The appliance is used outside the described use
- The appliance is modified or opened
- Mechanical damage or damage by media, liquids, natural wear and tear
- The appliance is improperly set up or incorrectly electrically connected
- The measuring system is overloaded

English

3.4 Monitoring of Test Resources

In the framework of quality assurance the measuring-related properties of the balance and, if applicable, the testing weight, must be checked regularly. The responsible user must define a suitable interval as well as type and scope of this test. Information is available on KERN's home page (www.kern-sohn.com with regard to the monitoring of balance test substances and the test weights required for this. In KERN's accredited DKD calibration laboratory test weights and balances may be calibrated (return to the national standard) fast and at moderate cost.

4 Basic Safety Precautions

4.1 Pay attention to the instructions in the Operation Manual

Carefully read this operation manual before setup and commissioning, even if you are already familiar with KERN balances.

4.2 Personnel training

The appliance may only be operated and maintained by trained personnel.

5 Transportation & Storage

5.1 Testing upon acceptance

When receiving the appliance, please check packaging immediately, and the appliance itself when unpacking for possible visible damage.

5.2 Packaging / return transport

- ⇨ Keep all parts of the original packaging for a possibly required return.
- ⇨ Only use original packaging for returning.
- ⇨ Prior to dispatch disconnect all cables and remove loose/mobile parts.
  - ⇨ Reattach possibly supplied transport securing devices.
- ⇨ Secure all parts such as the glass wind screen, the weighing platform, power unit etc. against shifting and damage.

6 Unpacking, Setup and Commissioning

6.1 Installation Site, Location of Use

The balances are designed in a way that reliable weighing results are achieved in common conditions of use.
You will work accurately and fast, if you select the right location for your balance.

Therefore, observe the following for the installation site:

- Place the balance on a firm, level surface;
- Avoid extreme heat as well as temperature fluctuation caused by installing next to a radiator or in the direct sunlight;
- Protect the balance against direct draughts due to open windows and doors;
- Avoid jarring during weighing;
- Protect the balance against high humidity, vapours and dust;
- Do not expose the device to extreme dampness for longer periods of time. Non-permitted condensation (condensation of air humidity on the appliance) may occur if a cold appliance is taken to a considerably warmer environment. In this case, acclimatize the disconnected appliance for ca. 2 hours at room temperature.
- Avoid static charge of goods to be weighed or weighing container.

If electro-magnetic fields or static charge occur, or if the power supply is unstable major deviations on the display (incorrect weighing results) are possible. In that case, the location must be changed.

6.2 Unpacking and placing

Open package, take out the appliance and accessories. Verify that there has been no damage and that all packing items are present.
The balance must be installed in a way that the weighing plate is exactly in horizontal position.
Mount the display unit in a way that facilitates operation and where it is easy to see.

English

6.2.1 Scope of delivery / serial accessories

- Platform and display unit, (see chap. 2)
- 4 x adjustment feet (excepted platform size 314.5 x 304.5 cm)
- Mains power supply
- Wall fixture (with fixing screws)
- Operating instructions

6.2.2 Assembly instructions for the use of the wall fixture

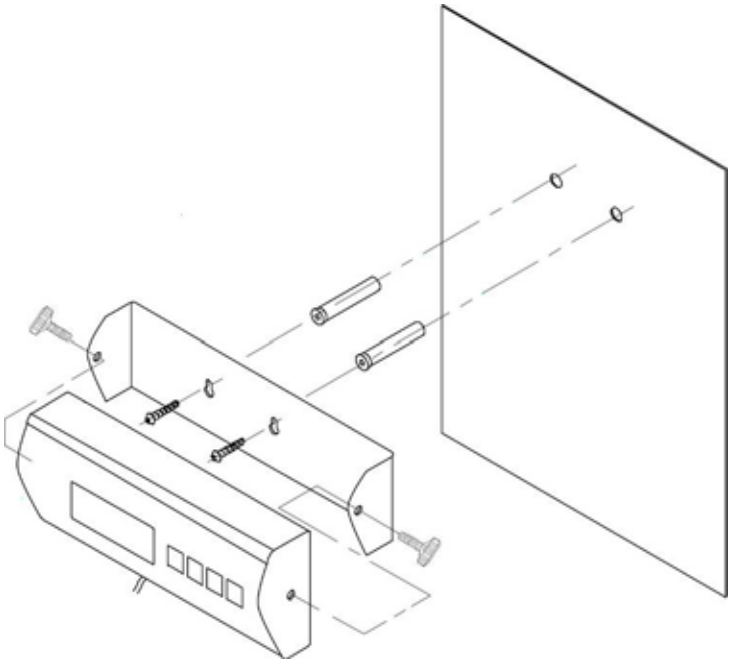

6.3 Mains connection

Power is supplied via the external mains adapter. The stated voltage value must be the same as the local voltage.
Only use original KERN mains adapters. Using other makes requires consent by KERN.

6.4 Battery operation

On the rear side of the display unit remove the battery cover and connect 6 x 1.5V mignon cells. Reinsert the battery cover.
In order to save the battery, the balance switches automatically off after 3 minutes without weighing. Further shutdown times can be set in the Menu (Function "A.OFF"), see Section 9.
If the batteries are exhausted, the battery symbol will appear (see chap. 2.1). Switch-off balance and replace batteries at once.
If the balance is not used for a longer time, take out the batteries and store them separately. Leaking battery liquid could damage the balance.

6.5 Initial Commissioning

In order to obtain exact results with the electronic balances, your balance must have reached the operating temperature (see warming up time chap. 1). During this warming up time the balance must be connected to the power supply (mains, accumulator or battery).

The accuracy of the balance depends on the local acceleration of gravity.
Strictly observe hints in chapter Adjustment.

English

7 Adjustment

As the acceleration value due to gravity is not the same at every location on earth, each balance must be coordinated - in compliance with the underlying physical weighing principle - to the existing acceleration due to gravity at its place of location (only if the balance has not already been adjusted to the location in the factory). This adjustment process must be carried out for the first commissioning, after each change of location as well as in case of fluctuating environment temperature. To receive accurate measuring values it is also recommended to adjust the balance periodically in weighing operation.
Observe stable environmental conditions. A warming up time (see chapter 1) is required for stabilization.

⇨ In weighing mode press the **UNIT** key and keep it pressed until „**CAL**“ followed by the weight value of the required adjustment weight in displayed. „**LOAd**“ is displayed alternatively.

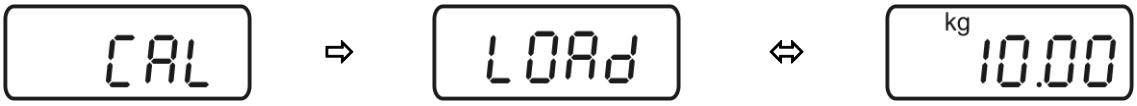

Example

⇨ Carefully place the required adjustment weight (see tab. 1 „Technical data“) in the centre of the weighing plate
Press **TARE** key, adjustment is started.

⇨ Wait until the stability display appears, after that the adjustment is finished. The balance will automatically return to Weighing mode upon successful completion of the adjustment and will display the weight of the adjustment weight.

⇨ Take away adjustment weight.

i An error message will be displayed in the event of an adjustment error or incorrect adjustment weight. Remove the adjustment weight and repeat the adjustment process.

Keep the adjustment close to the balance. Daily control of the weighing exactness is recommended for quality-relevant applications.

8 Operation

Start-up

⇨ Press the **ON/OFF** key.
The balance will carry out a self-test. The balance is ready for weighing when the weight display appears.

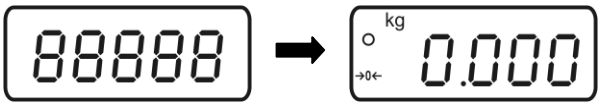

Should the balance not display exactly zero despite empty weighing plate, press the **TARE** button. The balance will be set to zero after a short standby time.

Switching Off

⇨ Press **ON/OFF** button, the display disappears

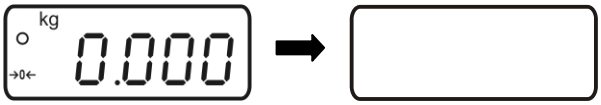

Weighing

⇨ Place goods to be weighed on balance

⇨ Wait for stability display

⇨ Read weighing result.

Switch-over weighing unit

⇨ By pressing the **UNIT** button the weighing result can be displayed in another unit **[kg ⇆ lb]**.

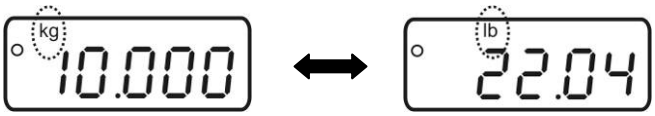

Unit conversion**: 1 kg = 2.20462 lb**

English

Taring

⇨ Place an empty weighing container, the weight of the weighing container will be displayed.

⇨ Press the **TARE** button, the zero display disappears. The indicator [▲] under [NET] is displayed. The tare weight is saved until it is deleted.

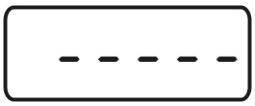

⇩

⇨ Weigh the material, the net weight will be indicated.

The taring process can be repeated any number of times, e.g. when adding several components for a mixture (adding). The limit is reached when the whole weighing range is exhausted.

The weight of the weighing container will be displayed as a minus number after removing the weighing container.

The tare weight is saved until it is deleted.

Delete tare

⇨ Unload the balance and press the **TARE** button, the zero display appears.

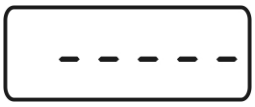

⇩

Hold function (animal weighing function)

The balance has an integrated animal weighing function (mean value calculation). Using this function it is possible to weigh domestic or small animals exactly (min. load 1% of the max. one), although they do not stand quiet on the weighing plate.

⇨ Put upon weighing goods and press the **HOLD** key. In the display the indicator [▲] starts flashing. During this time the balance takes up several measured values and displays then the calculated mean value.

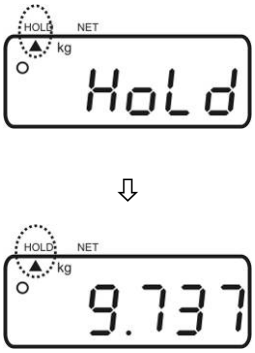

⇨ This value remains in the display until the **HOLD** button is pressed again. The indicator [▲] under [HOLD] goes out, the balance returns into normal weighing mode.

⇨ Press the **HOLD** button once more to repeat this function as often as required.

ℹ There is no average value calculation in the event of too much movement (heavy display oscillation).

English

Plus/minus weighing

⇨ For example for item weight check, production check etc. switch-on the balance using **ON/OFF** button and wait for zero display.

⇨ Put the nominal weight on the weighing plate and tare to zero using **TARE** key. Remove the nominal weight.

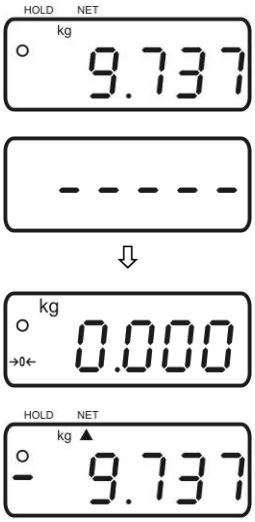

⇨ Put the test objects subsequently on the weighing plate, the respective deviation from the nominal weight is displayed with the respective sign to „+“ and „-“ (e.g. + 0.037 g).

According to the same procedure also packages with the same weight can be produced, referring to a nominal weight.

⇨ Back to weighing mode by pressing the **TARE** button.

English

9 Menu

Changes are only allowed on the functions Unit (weighing units) and A.OFF (automatic switch-off function).

- ⇨ In weighing mode keep **TARE** button depressed for approx. 3 sec until "**SETUP**" is displayed followed by "**UNIT**"
- ⇨ Press the **HOLD** button as often as necessary until the required function is displayed.
- ⇨ Press the **TARE** button to confirm the selected function. The current setting will be displayed. Using the **HOLD** ↓ or **TARE** → button, select the desired parameter. Use the **HOLD** button to return to the menu.
- ⇨ To exit the Menu and save, press the **HOLD** button as often as required until "**END**" is displayed and then confirm by pressing **TARE**. The balance returns automatically into weighing mode.

Navigation:

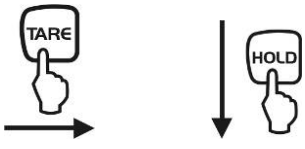

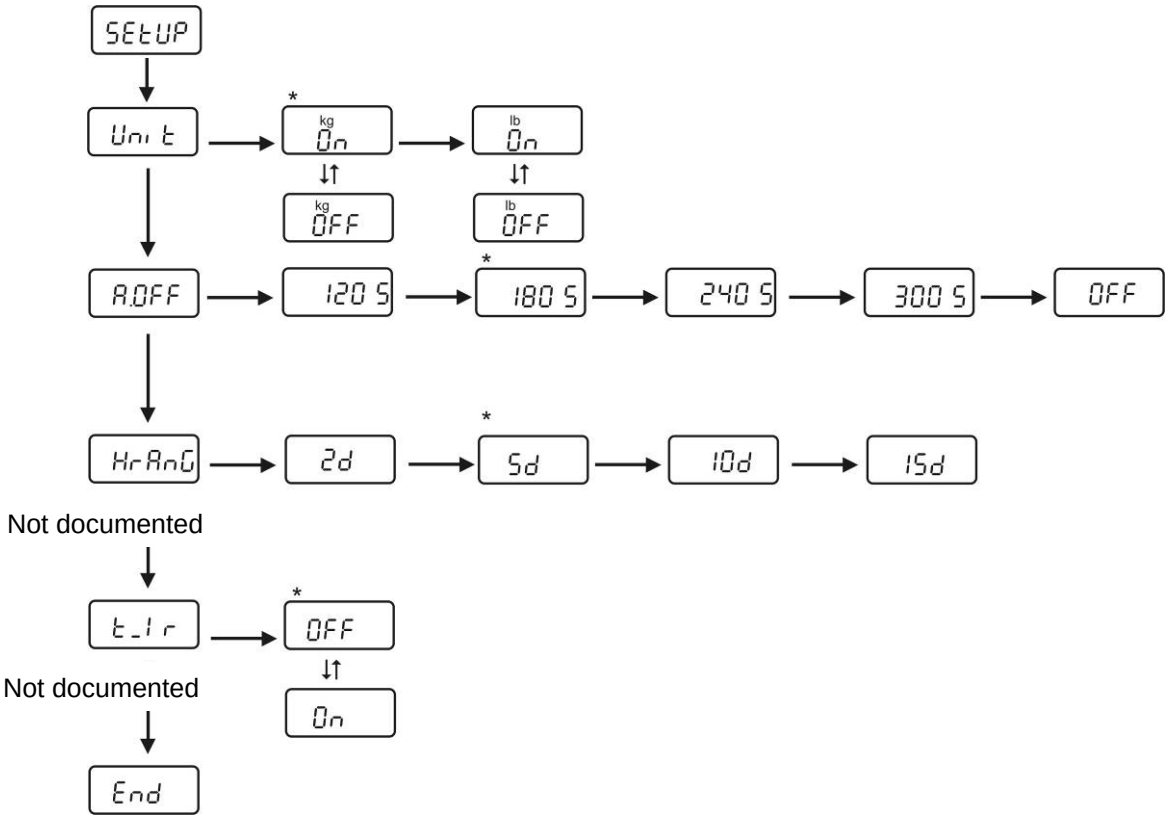

Factory settings are marked by *.

English

10 Service, maintenance, disposal

10.1 Cleaning

Before cleaning, disconnect the appliance from the operating voltage.

Please do not use aggressive cleaning agents (solvents or similar agents), but a cloth dampened with mild soap suds. Take care that the device is not penetrated by fluids and polish it with a dry soft cloth.
Loose residue sample/powder can be removed carefully with a brush or manual vacuum cleaner.

Remove spilled weighing goods immediately.

English

10.2 Service, maintenance

The appliance may only be opened by trained service technicians who are authorized by KERN.
Before opening, disconnect from power supply.

10.3 Disposal

Disposal of packaging and appliance must be carried out by operator according to valid national or regional law of the location where the appliance is used.

11 Error messages, troubleshooting guide

Error message	Function
LO	Capacity of batteries exhausted
ERRE	EEPROM error display unit
ErrEd	EEPROM error
Err	Overload
ErrL	Minimum weight under min. value

In case of an error in the program process, briefly turn off the balance and disconnect from power supply. The weighing process must then be restarted from the beginning.

Help:

Fault	**Possible cause**
The displayed weight does not glow.	• The balance is not switched on. • The mains supply connection has been interrupted (mains cable not plugged in/faulty). • Power supply interrupted.
The displayed weight is permanently changing -	• Draught/air movement • Table/floor vibrations • The weighing plate is in contact with foreign matter. • Electromagnetic fields / static charging (choose different location/switch off interfering device if possible)
The weighing value is obviously wrong	• The display of the balance is not at zero • Adjustment is no longer correct. • The balance is on an uneven surface. • Great fluctuations in temperature. • Electromagnetic fields / static charging (choose different location/switch off interfering device if possible)

Should other error messages occur, switch balance off and then on again. If the error message remains inform manufacturer.

English