126

Digital Multimeter

Instruction Manual

TABLE OF CONTENTS

page

A. INTRODUCTION
1. Congratulations 3
2. Product Description 3
3. EC Declaration of Conformity 4

B. SAFETY CONSIDERATIONS 5

C. TECHNICAL DATA
1. Features and Benefits 6
2. Product Applications 7
3. Specifications 8

D. MEASUREMENT TECHNIQUES
1. Controls and Functions 10
2. Step by Step Procedures:
   a) Measuring DC Volts 13
   b) Measuring AC Volts 15
   c) Measuring DC Amps 16
   d) Measuring AC Amps 17
   e) Measuring Resistance 19
   f) Measuring Diodes 20
   g) Continuity Buzzer 21
   h) Data Hold 21
   i) Record Mode 22

E. ACCESSORIES 23

F. MAINTENANCE 24

G. TROUBLE SHOOTING GUIDE 25

A. INTRODUCTION

1. Congratulations!!

Thank you for purchasing TPI brand products. The meter is easy to use and is built to last. It is backed by a 3 year limited warranty. Please remember to complete and return your product warranty registration card.

2. Product Description

The 126 is a hand-held autoranging DMM. The 126 measures ACV, DCV, ACA, DCA, Resistance, Diodes and Continuity.

The 126 also features:

- **REC** Records Min/Max readings during specified measurement intervals.
- **AC/DC** Toggles between AC/DC volts and Amps.
- **RANGE** Allows the user to manually range the 126 instead of autoranging.
- **Data Hold** Holds the reading on the display for easy viewing.
- **Auto Off** Preserves battery life.

The 126 comes complete with the following accessories:

126 Instrument
Rubber Boot
Test Lead Set
Instruction Manual
Battery

3. EC Declaration of Conformity

This is to certify that TPI model 126 conforms to the protection requirements of the council directive 89/336/EEC, in the approximation of laws of the member states relating to Electromagnetic compatibility and 73/23/EEC, The Low Voltage Directive by application of the following standards:

EN 50081-1	**1992 Emissions Standard**
EN 50082-1	**1992 Immunity Standard**
EN61010-1	**1993 Safety Standard**
EN61010-2-031	**1995 Safety Standard**
EN61010-2-032	**1995 Safety Standard**

To ensure conformity with these standards, this instrument must be operated in accordance with the instructions and specifications given in this manual.

CAUTION:

Even though this instrument complies with the immunity standards, the accuracy can be affected by strong radio emissions not covered in the above standards. Sources such as hand held radio transceivers, radio and TV transmitters, vehicle radios and cellular phones generate electromagnetic radiation that could be induced into the test leads of this instrument. Care should be taken to avoid such situations or alternatively, check to make sure that the instrument is not being influenced by these emissions.

B. SAFETY CONSIDERATIONS

> ⚠ ***WARNING: Please follow manufacturers test procedures whenever possible. Do not attempt to measure unknown voltages or components until a complete understanding of the circuit is obtained.***

GENERAL GUIDELINES

ALWAYS

- Test the 126 before using it to make sure it is operating properly.
- Inspect the test leads before using to make sure there are no breaks or shorts.
- Double check all connections before testing.
- Have someone check on you periodically if working alone.
- Have complete understanding of circuit being measured.
- Disconnect power to circuit then, connect test leads to the 126, then to circuit being measured.

NEVER

- Attempt to measure unknown high voltages.
- Attempt to measure current with the meter in parallel to the circuit.
- Connect the test leads to a live circuit before setting up the instrument.
- Touch any exposed metal part of the test lead assembly.

INTERNATIONAL SYMBOLS

DANGEROUS VOLTAGE

AC (ALTERNATING CURRENT)

DC (DIRECT CURRENT)

REFER TO INSTRUCTION MANUAL

GROUND

FUSE

DOUBLE INSULATION

ON/OFF, PUSH BUTTON SWITCH

C. TECHNICAL DATA

1. Features and Benefits

Agency Approval	Meets CE and IEC 1010 requirements.
Record	Records Min/Max values.
Range	Allows you to either manual range or use auto range to select the appropriate range.
Auto Off	Preserves battery life. LCD shows oFF when in this mode. Automatically powers down after 30 minutes of inactivity.
3 Year Warranty	Covered by a standard 3 year warranty.

2. Product Applications

Perform the following tests and/or measurements with the TPI 126 and the appropriate function:

HVAC/R

FUNCTION	
DCmV	• Thermocouples in furnaces or gas applications.
DCV	• Thermocouples in furnaces of gas applications. DC controlled circuits.
ACA	• Heat anticipator current in thermostats.
ACV	• Line voltage.
ACV or DCV	• Control circuit voltage.
DCµA	• Flame safeguard control current.
OHMS	• Heating element resistance (continuity).
OHMS	• Compressor winding resistance.
OHMS	• Contactor and relay coil resistance.
OHMS	• Continuity of wiring.
DCmV	• Temperature with optional temperature adapter (A301).

ELECTRICAL

FUNCTION	
ACV	• Measure line voltage.
OHMS	• Continuity of circuit breakers.
DCV	• Voltage of direct drive DC motors.

3. Specifications

IEC 1010 Over Voltage:
CAT II - 1000V
CAT III - 600V
Pollution Degree 2

c UL us LISTED
UL 3111-1

a. DCV

Range	Resolution	Accuracy	Impedance
400mV	0.1mV	±0.3% of reading, ±3 digits	10MΩ
4V	0.001V		
40V	0.01V		
400V	0.1V		
1000V	1V		

b. ACV (45 to 450 Hz)

Range	Resolution	Accuracy	Impedance
4V	0.001V	±0.8% of reading, ±3 digits	10MΩ
40V	0.01V		
400V	0.1V		
750V	1V		

c. DCA

Range	Resolution	Accuracy	Overload Protection
400µA	0.1µA	±0.8% of reading, ±3 digits	Fuse 0.5Amp/600V
4mA	0.001mA		
40mA	0.01mA		
400mA	0.1mA		

***Warning:** Use only correct size, voltage and current rated fuses.
Test Leads: Use only correct type and overvoltage category rating.

d. ACA

Range	Resolution	Accuracy	Overload Protection
400µA	0.1µA	±0. 8% of reading, ±3 digits	Fuse 0.5Amp/600V
4000µA	1µA		
40mA	0.01mA		
400mA	0.1mA		

e. OHM (Resistance,Ω)

Range	Resolution	Accuracy	Overload Protection
400Ω	0.1Ω	±0. 5% of reading, ±3 digits	600V DC or AC Peak
4kΩ	0.001kΩ		
40kΩ	0.01kΩ		
400kΩ	0.1kΩ		
4MΩ	0.001MΩ	±1% of reading, ±3 digits	
40MΩ	0.01MΩ		

f. Diode Test

Test Voltage	Max Test Current	Over Load Protection
3V	Approx. 30µA	600 V DC or Peak AC

g. Continuity Buzzer

Test Voltage	Threshold	Over Load Protection
3V	< 50Ω	600 V DC or Peak AC

h. General Specifications

Max. Volt. between any Input and Ground	1000V
Fuse Protection	**mA:** 0.5Amp/600VAC
Display Type	4,000 Count, 2 times per second update
Operating Temp.	0° to 40°C (32° to 104°F)
Storage Temp.	-10° to 50°C (14° to 122°F)
Relative Humidity	0% to 80%
Power Supply	2 Each 1.5 Volt “AA” Batteries
Battery Life	200 hrs. Typical
Size (H x L x W)	33mm x 86mm x 187mm (1.3in x 3.4in x 7.4in)
Weight	340g (12oz)

D. MEASUREMENT TECHNIQUES

1. Controls and Functions:

Push Buttons

AC/DC Toggles between AC and DC volts.

REC Activates the Min/Max mode. Hold in for 3 seconds to deactivate.

RNG Activates manual ranging. Hold in for 3 seconds to return to autorange.

D-H Activates the Data Hold function.

Rotary Switch

DCmV Used to measure millivolts DC

AC/DCV Used to measure AC and DC volts.

OHM Used to measure ohms (resistance).

→| Used for testing diodes.

Function for using audible continuity buzzer.

µA Used to measure AC and DC microamps.

mA Used to measure AC and DC milliamps.

V Function for measuring DC Volts.

V Function for measuring AC Volts.

1. Controls and Functions: (cont.)

Input Jacks

µmA Red test lead connection for current measurement on the **µ**A and mA functions.

COM Black test lead connection for all functions.

VΩ ⊣⊢ Red test lead connection for all Volt, Ohm, Diode and Continuity measurements.

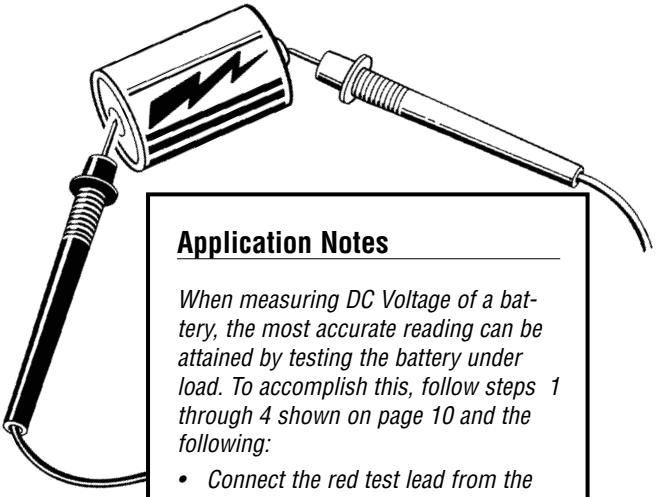

Application Notes

When measuring DC Voltage of a battery, the most accurate reading can be attained by testing the battery under load. To accomplish this, follow steps 1 through 4 shown on page 10 and the following:

- *Connect the red test lead from the meter to the positive (+) terminal of the battery.*
- *Connect the black test lead to the negative (-) terminal of the battery.*
- *Reconnect power to the circuit and read the voltage on the 126.*

2. Step by Step Procedures:

a. MEASURING DC VOLTS

CAUTION!
Do not attempt to make a voltage measurement if a test lead is plugged in the A or µmA input jack. Instrument damage and/or personal injury may result.

⚠ ***WARNING!***
Do not attempt to make a voltage measurement of more than 1000V or of a voltage level that is unknown.

Instrument set-up:

FUNCTION	BLACK TEST LEAD	RED TEST LEAD	MINIMUM READING	MAXIMUM READING
m⎓	COM	VΩ⊣▶	0.1mV	400.0mV
⎓	COM	VΩ⊣▶	0.001V	600V

Measurement Procedure:

1. Disconnect power to the circuit to be measured.
2. Plug the black test lead into the **COM** input jack.
3 Plug red test lead into the **V**Ω⊣▶ input jack.
4. Set rotary switch to either the **m⎓** or **⎓** range, depending on the voltage to be measured.
5. Connect the test leads to the circuit to be measured.
6. Reconnect power to the circuit to be measured.
7. Read the voltage on the 126.

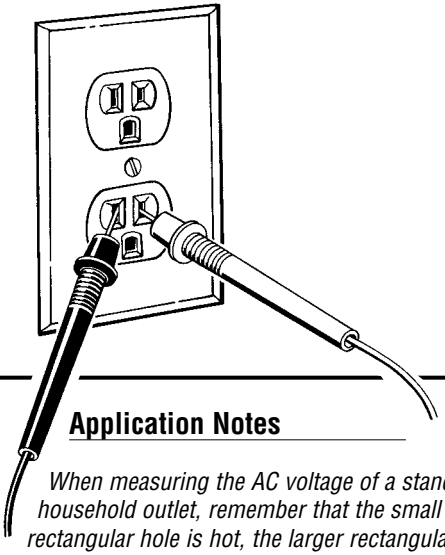

Application Notes

When measuring the AC voltage of a standard household outlet, remember that the small rectangular hole is hot, the larger rectangular hole is neutral and the round hole is ground.

To disconnect power from the outlet, find the fuse or circuit breaker that controls the outlet and turn it off.

Set up the meter following the steps under "Measurement Procedure" on page 13. Then proceed with the following:

- *Connect the red test lead to the hot side of the outlet and the black lead to the neutral side of the outlet. Reconnect power to the outlet and read the voltage on the meter. The reading should be approximately 110V to 130V.*

- *Disconnect power from the outlet and move the red wire to the ground hole. Reconnect power to the outlet and read the voltage on the meter. Typically less than 20V should exist from neutral to ground. If 110V or above exists, the outlet may be wired incorrectly.*

b. MEASURING AC VOLTS

CAUTION!
Do not attempt to make a voltage measurement if a test lead is plugged in the A or µmA input jack. Instrument damage and/or personal injury may result.

⚠ ***WARNING!***
Do not attempt to make a voltage measurement of more than 750V or of a voltage level that is unknown.

Instrument set-up:

FUNCTION	BLACK TEST LEAD	RED TEST LEAD	MINIMUM READING	MAXIMUM READING
Ṽ	COM	VΩ⊣▶	0.001V	600V

Measurement Procedure:

1. Disconnect power to the circuit to be measured.
2. Plug the black test lead into the **COM** input jack.
3. Plug the red test lead into the **VΩ⊣▶** input jack.
4. Set the rotary switch to the **Ṽ** function depending on the voltage to be measured.
5. Connect the test leads to the circuit to be measured.
6. Reconnect power to the circuit to be measured.
7. Read the voltage on the 126.

c. MEASURING DC AMPS

CAUTION!

Do not attempt to make a current measurement with the test leads connected in parallel with circuit to be tested. Test leads must be connected in series with the circuit.

⚠ ***WARNING!***

Do not attempt to make a current measurement of circuits with more than 600V present. Instrument damage and /or personal injury may result.

Instrument set-up:

FUNCTION	BLACK TEST LEAD	RED TEST LEAD	MINIMUM READING	MAXIMUM READING
µA ⎓	COM	mAµA	0.1µA	4000µA
mA ⎓	COM	mAµA	0.01mA	400mA
10A ⎓	COM	A	0.001A	10.00A

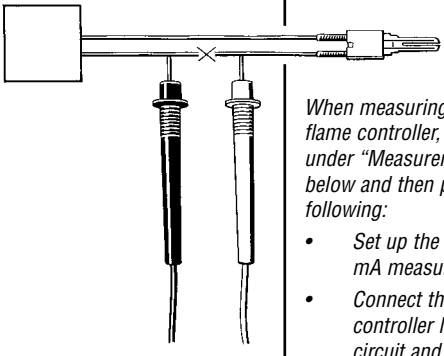

Application Notes

When measuring the DC current of a flame controller, follow the steps under "Measurement Procedure" below and then proceed with the following:

- *Set up the meter for making a mA measurement.*
- *Connect the meter to the flame controller lead by opening the circuit and inserting the leads in series with the circuit as shown in the picture above.*

Measurement Procedure:

1. Disconnect power to circuit to be measured.
2. Plug the black test lead into the **COM** input jack.
3. Plug the red test lead into the **mAµA** or **A** input jack depending on the value of current to be measured.
4. Set the rotary switch to the **µA, mA,** or **10A** function.
5. Connect test leads in series to circuit to be measured.
6. Reconnect power to the circuit to be measured.
7. Read the current on the 126.

d. MEASURING AC AMPS

CAUTION!
Do not attempt to make a current measurement with the test leads connected in parallel with the circuit to be tested. Test leads must be connected in series with the circuit.

⚠ ***WARNING!***
Do not attempt to make a current measurement of circuits with more than 600V present. Instrument damage and /or personal injury may result.

Instrument set-up:

FUNCTION	BLACK TEST LEAD	RED TEST LEAD	MINIMUM READING	MAXIMUM READING
µA~	COM	mAµA	0.1µA	4000µA
mA~	COM	mAµA	0.01mA	400mA
10A~	COM	A	0.001A	10.00A

Measurement Procedure:

1. Disconnect power to the circuit to be measured.
2. Plug the black test lead into the COM input jack.
3. Plug the red test lead into the mAµA or A input jack depending on the value of current to be measured..
4. Set the rotary switch to the µA~, mA~ or 10A~ function.
5. Connect test leads in series to circuit to be measured.
6. Reconnect power to the circuit to be measured.
7. Read the current on the 126.

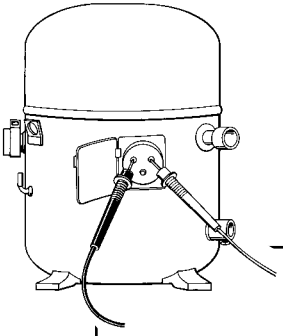

Application Notes

When measuring resistance of a motor, make sure the power is disconnected prior to testing.

Set up the meter following the steps under "Measurement Procedure" on page 17, and then proceed with the following:

- *Connect the red test lead to one power input line of the motor and the black test lead to the other power input line of the motor. In most applications, if the reading is OFL, the motor winding is open.*
- *Connect the red test lead to the frame of the motor and the black test lead to the winding. In most applications, if a reading of 0 Ohms is displayed, the winding is shorted to the motor frame (ground).*

e. MEASURING RESISTANCE

WARNING!
Do not attempt to make resistance measurements with circuit energized. For best results, remove the resistor completely from the circuit before attempting to measure it.

⚠ ***NOTE:***
To make accurate low ohm measurements, short the ends of the test leads together and record the resistance reading. Deduct this value from actual readings.

Instrument set-up:

FUNCTION	BLACK TEST LEAD	RED TEST LEAD	MINIMUM READING	MAXIMUM READING
Ω	COM	VΩ⊣▶	0.1Ω	40.00MΩ

Measurement Procedure:

1. Disconnect power to the circuit to be measured.
2. Plug the black test lead into the **COM** input jack.
3. Plug the red test lead into the **VΩ⊣▶** input jack.
4. Set the rotary switch on the 126 to the **Ω** function.
5. Connect the test leads to the circuit to be measured.
6. Read the resistance value on the 126.

f. MEASURING DIODES

CAUTION!
Do not attempt to make diode measurements with circuit energized. The only way to accurately test a diode is to remove it completely from the circuit before attempting to measure it.

Instrument set-up:

FUNCTION	BLACK TEST LEAD	RED TEST LEAD	MINIMUM READING	MAXIMUM READING
⊣▶	COM	VΩ⊣▶	0.001V	2.000V

Measurement Procedure:

1. Disconnect power to the circuit to be measured.
2. Plug the black test lead into the **COM** input jack.
3. Plug the red test lead into the **VΩ⊣▶** input jack.
4. Set the rotary switch to the ⊣▶ function.
5. Connect black test lead to the banded end of the diode and the red test lead to the non-banded end of the diode.
6. Reading on the display should be between 0.5 and 0.8 volts.
7. Reverse test lead connections in 5 above.
8. Reading on the display should be OFL (Overload).

NOTE: If diode reads 0 in both directions, diode is shorted. If diode reads OFL in both directions, diode is open.

g. CONTINUITY BUZZER

⚠ ***WARNING!***
Do not attempt to make continuity measurements with circuit energized.

Instrument set-up:

FUNCTION	BLACK TEST LEAD	RED TEST LEAD
•)))	COM	VΩ→|

Measurement Procedure:

1. Disconnect power to the circuit to be measured.
2. Plug the black test lead into the **COM** input jack.
3. Plug the red test lead into the **VΩ→|** input jack.
4. Set the rotary switch to the •))) function.
5. Press yellow push button to activate continuity buzzer.
6. Connect the test leads to the circuit to be measured.
7. Listen for the buzzer to confirm continuity.

h. DATA HOLD

Press the **Data Hold** button at any time on any function or range to freeze the reading on the LDC display. This function is very useful when measuring in locations where the display is difficult to read.

i. RECORD MODE

The record mode saves minimum (MIN) and maximum (MAX) values measured for a series of reading. Activate the function as follows:

1. Depress the **REC** button on the 126.
2. The 126 will immediately start to record MIN/MAX values. REC will be on the LCD to show record mode has been activated. The reading on the LCD will be the actual reading. The 126 will give a confirmation beep every time a new value is recorded.
3. Press the **REC** button a second time and the MIN reading will be displayed.
4. Press the **REC** button a third time and the MAX reading will be displayed on the LCD.
5. To terminate the record mode, hold the REC button down for approximately 2 seconds or turn the rotary switch to a different function.

E. ACCESSORIES*

Standard Accessories	Part No.
2 each 1.5 volt AA Batteries	A002
Fuse, 0.5 Amp	A104
Test Lead Set	A040
Rubber Boot (126 only)	A101

Optional Accessories	Part No.
Deluxe Test Lead Set	SDK1
IEC 1010 Deluxe Test Lead Kit	TLS2000B
Temperature Adapter	A301
Boot Hook	A103
Soft Carrying Case	A100

*These accessories have not been evaluated by UL and are not considered as part of the UL Listing of this product.

F. MAINTENANCE

1. **Battery Replacement:** The 126 will display BAT when the two internal 1.5 Volt “AA” batteries need replacement. Batteries are replaced as follows:

   a. Disconnect and remove all test leads from live circuits and from the 126.

   b. Remove 126 from protective boot.

   c. Remove the four screws from back of housing.

   d. Carefully pull apart front and rear instrument housing.

   e. Remove old batteries and replace with new batteries.

   f. Reassemble instrument in reverse order from above.

2. **Fuse Replacement:** Both the A and mAµA input jacks are fuse protected. If either do not function, replace fuse as follows:

   a. Disconnect and remove all test leads from live circuits and from the 126.

   b. Remove 126 from protective boot.

   c. Remove the three screws from back of housing.

   d. Carefully pull apart the front and rear instrument housing.

   e. Remove the old fuse(s) and replace it with new fuse(s).

   f. Reassemble the instrument in reverse order from above.

G. TROUBLE SHOOTING GUIDE

Problem	Probable Causes
Does not power up	• Dead or defective battery • Broken wire from battery snap to PCB
Won't display current readings	• Open fuse • Open test lead • Improperly connected to circuit under test
All functions except ohms read high	• Very weak battery that will not turn on the low battery indicator on the LCD
ACV do not read	• Very weak battery that will not turn on the low battery indicator on the LCD

WARRANTY

Please refer to product warranty card for warranty statement.

Test Products International, Inc.
9615 SW Allen Blvd., Ste. 104
Beaverton, OR USA 97005
503-520-9197 • Fax: 503-520-1225 • tpiusa@msn.com

Test Products International plc
Longley House
East Park
Crawley, West Sussex RH10 6AP
England
Tel: 01293 561212 • Fax: 01293 813465

L126M • 10/28/02 copyright © 2002 Test Products International, Inc.

126 SPECIFICATIONS

±0.3% Basic DCV Accuracy **(also see pages 8-9)**

Function	Range	Resolution
DCV	400mV	0.1mV
	4V	0.001V
	40V	0.01V
	400V	0.1V
	600V	1V
ACV	4V	0.001V
	40V	0.01V
	400V	0.1V
	600V	1V
DCA	400µA	0.1µA
	4mA	0.001mA
	40mA	0.01mA
	400mA	0.1mA
ACA	400µA	0.1µA
	4000µA	1µA
	40mA	0.01mA
	400mA	0.1mA
OHM	400Ω	0.1Ω
	4kΩ	0.001kΩ
	40kΩ	0.01kΩ
	400kΩ	0.1kΩ
	4MΩ	0.001MΩ
	40MΩ	0.01MΩ

	Test Voltage	Max. Test Current
Diode	3V	Approx. 30µA

	Test Voltage	Threshold
Continuity	3V	<50Ω

Test Products International, Inc.

L126M • 10/28/02 copyright © 2002 Test Products International, Inc.