Digital Microhmmeter Type DO7

Operating Instructions

CROPICO

Bracken Hill, South West Industrial Estate,
Peterlee, Co. Durham SR8 2SW. England.
Tel: +44 (0)191-586 3511 Fax: +44 (0)191-586 0227
www.cropico.co.uk
sales@cropico.co.uk

Limited Warranty & Limitation of Liability

CROPICO guarantees this product for a period of 1 year. The period of warranty will be effective at the day of delivery.

(c) Copyright 2008
All rights reserved. Nothing from this edition may be multiplied, or made public in any form or manner, either electronically, mechanically, by photocopying, recording, or in any manner, without prior written consent from CROPICO. This also applies to accompanying drawings and diagrams.

Due to a policy of continuous development CROPICO reserves the right to alter the equipment specification and description outlined in this publication without prior notice and no part of this publication shall be deemed to be part of any contract for the equipment unless specifically referred to as an inclusion within such contract.

Disposal of Old Product

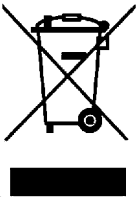

This product has been designed and manufactured with high quality materials and components that can be recycled and reused.

When the crossed out wheelie bin symbol is attached to a product it means the product is covered by the European Directive 2002/96/EC.

Please familiarise yourself with the appropriate local separate collection system for electrical and electronic products.

Please dispose of this product according to local regulations. Do not dispose of this product along with normal waste material. The correct disposal of this product will help prevent potential negative consequences for the environment and human health.

User Note:
These Operating Instructions are intended for the use of Competent Personnel.

Contents

Supplied Accessories: 2
1. SAFETY 2
WARNING! 2
2. INTRODUCTION 3
Display range 6000 3
3. MEASURING PRINCIPLE 3
4. CASE DESIGN 3
5. MAINTENANCE 3
6. BATTERY CHARGING 4
BATTERIES 4
BATTERY REPLACEMENT 5
7. TECHNICAL DATA 5
8. DESCRIPTION OF CONTROLS 6
Range Selection: 7
Error & Status Lamps 7
9. METHODS OF MEASUREMENT 7
10. POWER UP 9
11. MEASUREMENT 9
Over-Range 9
12. REMOTE 10
13. PRINTER OUTPUT 10
14. PROTECTION 10
15. CALIBRATION PROCESS 11
16. EQUIPMENT REQUIRED 11
17. PREPARATION 11
18. CALIBRATION 12
19. VERIFICATION 12
20. USING DISCRETE RESISTANCE STANDARDS 13
21. SPECIAL OPERATION - CAL RESET 15
22. AVAILABE ACCESSORIES 17

IMPORTANT NOTE

Instruments are delivered ready for immediate use; no extras are required.

Supplied Accessories:

1 Set of test leads
1 Mains cord
1 Operating Instructions (English)

When unpacked, inspect for physical damage and report any defects immediately in writing, retaining packaging materials for inspection. Before placing into service, ensure mains voltage is correct, instruments are normally supplied for 240V 50Hz. Other voltages may also be selected according to the chart in section 5, (Maintenance). Be sure to also change the fuse to the correct type.

1. SAFETY

This apparatus is designated Safety Class I as defined in the IEC Publication 348.

This apparatus has been designed and tested in accordance with IEC Publication 348, entitled "Safety Requirements for Electronic Measuring Apparatus", and has been supplied in a safe condition. The present instruction manual contains some information and warnings which must be followed by the user to ensure safe operation and to retain the apparatus in safe condition.

If this apparatus is to be connected to a fixed installation, then before any other connection is made, the protective earth terminal must be connected to a protective conductor.

Before switching on the apparatus, make sure that it is set to the voltage of the power supply. The mains plug shall only be inserted in a socket outlet provided with protective earth contact. The protective action must not be negated by the use of an extension lead without a protective conductor.

WARNING!

Any interruption of the protective conductor inside or outside the apparatus, or disconnection of the protective earth terminal is likely to make the apparatus dangerous. Intentional interruption is prohibited.

When the apparatus is connected to its mains supply, terminals may be live, and the opening of covers or removal of parts (except those to which access can be gained by hand) is likely to expose live parts.

The apparatus must be disconnected from all voltage sources before it is opened for any adjustment, replacement, maintenance or repair.

Any adjustment, maintenance and repair of the opened apparatus under voltage shall be avoided as far as possible, and, if inevitable, shall be carried out only by a skilled person who is aware of the hazard involved.

Make sure that only fuses with the required current rating and of the specified type are used for replacement. The use of makeshift fuses, and the short-circuiting of fuse holders is prohibited.

Whenever it is likely that the protection has been impaired, the apparatus shall be made inoperative and be secured against any unintended operation and returned to our factory or Agent for rectification.

2. INTRODUCTION

The DO7 is an accurate bench/portable Digital Ohmmeter for the measurement of resistance in the range 0.1μΩ to 60Ω. It offers you the four terminal resistance measurement method to eliminate the effect of lead resistance. The measured values are displayed on a 4-digit LCD display; an overflow of the selected range is also indicated.

Display range 6000

Simple push-button selection of the range required, ensures that the DO7 may be easily used by unskilled personnel. Error and status warnings are illuminated when appropriate. The utmost care has been taken to ensure that the ohmmeter will withstand an accidental mains voltage applied to the measuring terminals, but it is not recommended that voltage should be applied.

3. MEASURING PRINCIPLE

The measurement is true 4 terminal, using the Kelvin principle. A stable current is produced across the resistance to be measured via the C terminals, and the voltage drop across the Rx is measured at the P terminals. This potential drop is then compared against the voltage drop across internal standards. The ratio of these is then converted to the resistance value of Rx and displayed in ohms on the digital display. High accuracy and long term stability is achieved by using our own manufactured internal resistance standards.

4. CASE DESIGN

The case is ruggedly constructed from an ABS/polycarbonate alloy, coloured safety yellow. A strong internal sub-frame ensures that the DO7 will withstand the harshest of environments. The front panel is a reverse printed polycarbonate overlay with clear and unambiguous text.

5. MAINTENANCE

Normally no maintenance is required other than cleaning with a moist cloth. Avoid aggressive detergents or solvents.

CAUTION: Before any maintenance, repair or exchange of parts or fuses, the instrument must be disconnected from the mains supply and all power sources. In the event of a fault occurring, the instrument should be returned to our factory or Agent. A mains fuse is fitted to the mains inlet socket on the front panel, and should be replaced if necessary.

CAUTION: Disconnect mains lead and all connecting leads, before removing fuse holder. Replace only with the correct fuse type, ie. according to the following chart.

Line Voltage Selection	Range VAC 47-63Hz	Fuse (250V) IEC 127 5 x 20 mm
100V 120V	87-110V 104-132V	2.5A (T)
220V 240V	191-242V 209-264V	1.25A (T)
Maximum Input Power : 80VA		

The input circuits are protected by a 6 AMP fuse located in a holder on the main printed circuit board. Access is gained by removing the top cover. Only replace with the correct fuse type as below.

10A Am 550V rms HRC Ceramic Cartridge 10 x 38 mm

IEC 269-2-1 NFC63-210

6. BATTERY CHARGING

The DO7 has built-in rechargeable sealed lead acid batteries which are fully charged when delivered. To ensure good service life from the batteries, the DO7 incorporates a sophisticated battery management system. To indicate the state of charge, 8 LEDs indicate the remaining battery capacity in % of full charge. These LEDs are arranged in a gas gauge style.

The battery charger is built in and the instrument may be connected to 100/120/220 or 240 volts supply. The appropriate voltage setting must be selected on the inlet socket and the correct fuse inserted. The LINE LED will illuminate on the front panel to indicate when the mains supply is connected.

Charging is automatically controlled with built-in protection circuits eliminating the possibility of over-charging. The display will blank when the battery voltage is too low to sustain measurements, and the battery state indicators show the current state of charge. The DO7 will operate whilst charging on all ranges except the bottom two, and an additional error of approximately 8 digits may be observed with mains supply connected. The lower ranges have a larger measuring current than can be supplied by the charger, and therefore batteries must be fully recharged before use. The batteries will recharge in approximately six hours, and the DO7 lid should be open to allow for maximum ventilation.

IMPORTANT Always connect instrument to mains supply after use and top up battery. Instruments should be stored with batteries fully charged, and when stored for long periods the batteries should be recharged each month.

Should the batteries become deeply discharged due to either being stored with the instrument switched on, or being left for long periods without charge, then it may appear that no charging is taking place when first connected to the mains supply. The Line LED will light but fast charge LEDS will not. The internal charger will automatically sense the battery state and will trickle charge with a very low current to restore the batteries before automatically switching to fast charge. This low current charge may take up to 20 hours to restore the batteries. Continuous charging will not damage the batteries and will, in fact, keep them in best condition.

BATTERIES

The internal batteries are a sealed lead acid type. Care should be taken when disposing of them and they may be returned to Cropico for safe disposal.

Any regulations and directions applying to the disposal of such material must be applied.

Do not dispose of battery in fire.

Do not short circuit.

Do not crush, puncture, open, dismantle or otherwise mechanically interfere with the battery.

NOTE: If storing for long periods, the batteries should be fully recharged every six months.

BATTERY REPLACEMENT

Battery replacement should only be carried out by competent and skilled personnel. Care should be taken to ensure the correct polarity of the connecting wire. The Red Wire always to the positive battery terminal (Note the blue tag fitted to this wire does NOT indicate polarity). If in doubt please refer to our Service Department.

7. TECHNICAL DATA

Digital Display	4 digit, LCD 0.8" height; 6000 count with automatic decimal point and error warning lamps
Working temperature	0...+40°C rel. humidity max. 80%
Normal temperature	20°C
Storage temperature	-20°C ... +50°C
Mains connection	100/120/220/240V +10 -13% 47-63 Hz
Size (mm.)	343 x 327 x 152
Mass	8.3 Kgs.

Measurement

Resistance	True four-terminal measurement with fixed dc measuring currents.
Measuring time	Approx. 0.5 seconds
Polarity	Forward and reverse measurement current may be selected,plus average mode which automatically displays the average value of positive and negative polarity measurement.

Range	Resolution	Typical Current	Uncertainty At 20°C ± 5°C, 1 Year	Temperature Co-efficient/°C*
60Ω	10mΩ	1mA	±(0.15% Rdg + 0.05% FS)	40 ppm Rdg + 30 ppm FS
6Ω	1mΩ	10mA	±(0.15% Rdg + 0.05% FS)	40 ppm Rdg + 30 ppm FS
600mΩ	100μΩ	100mA	±(0.15% Rdg + 0.05% FS)	40 ppm Rdg + 30 ppm FS
60mΩ	10μΩ	1Amp	±(0.15% Rdg + 0.05% FS)	40 ppm Rdg + 30 ppm FS
6mΩ	1μΩ	10Amp	±(0.2% Rdg + 0.1% FS)	40 ppm Rdg + 30 ppm FS
600μΩ	0.1μΩ	10Amp	±(0.2% Rdg + 0.2% FS)	40 ppm Rdg + 250 ppm FS

Ranges and Accuracy

***NOTE** Temperature coefficient to be added to uncertainty when operating outside the range 15 to 25°C

NOTE: Measurements on the lowest range 600μΩ will have an additional zero offset of up to 20 digits, if the measuring current is applied for long periods. This offset can be eliminated by using the average measuring mode.

8. DESCRIPTION OF CONTROLS

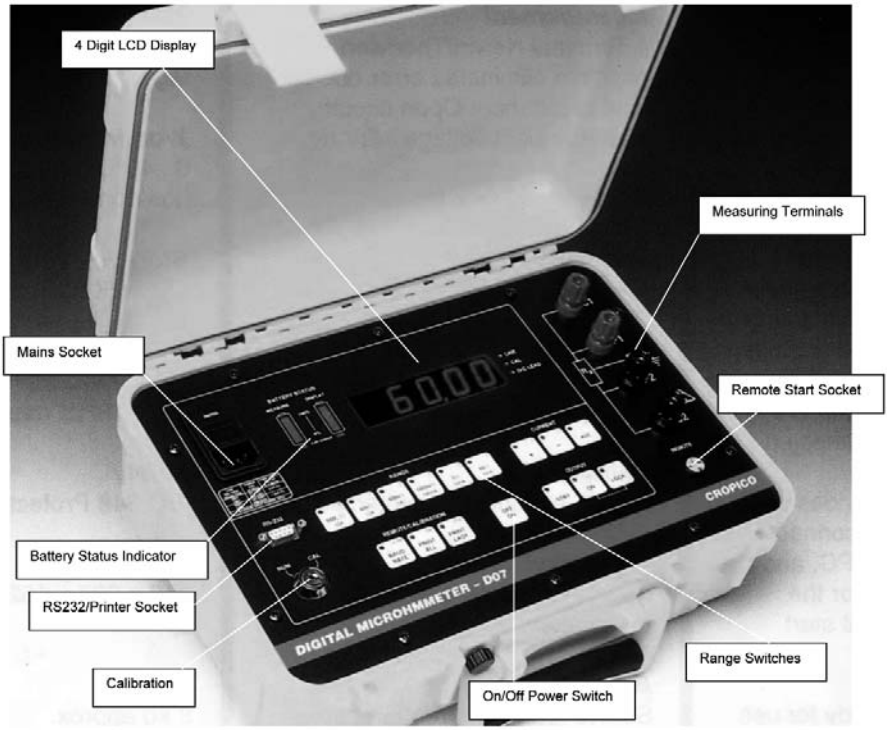

The measuring current polarity may be selected from the front panel. The display will indicate either + or - to denote the current flow. This is particularly useful when evaluating circuits with thermal emf or where diode effects can influence the measurement. For measurements where thermal emf can cause a large measuring zero error, we have provided an additional automatic average button. When pressed, the measuring current will automatically be reversed and the average value displayed, thus eliminating the need for external computations. This average facility will also adjust the measurement time automatically, thus giving the fastest possible measurement even on inductive circuits.

The +ve and -ve lamps will light to indicate that the current polarity is changing. For very unstable values where the average mode is unable to establish a stable reading, the averaging will be aborted after approximately 25 seconds and the display will indicate - - - - A new average cycle will be automatically initialised.

Range Selection:
The 6 ranges may be selected manually by simply pressing the desired range button. The selected range will be indicated by an LED and over-range will be indicated by the display reading - - - -.

Error & Status Lamps
These LEDs will light to indicate the instrument status..

LINE : Mains supply is connected to the instrument.

CAL : Calibration mode has been initialised by the key switch and the instrument is in calibration mode.

O/C One of the measuring leads is open circuit

LEAD : (too high resistance), or not connected to test sample correctly, or the internal protection fuse is open circuit. The lamp will always light in standby mode.

9. METHODS OF MEASUREMENT

9.1 Ohmmeter Connections

The Digital Ohmmeter type DO7 employs a four wire method of measurement, ie. it is necessary to make four connections to the resistor under test. The instrument is supplied with four leads; two for the potential connections which are made across the test resistor at the points between which the resistance is to be determined; and two for the current connections which connects the test resistor to the supply circuit.

a) Connect the black leads to the C1 and P1 terminals, and the red leads to terminals C2 and P2.

b) Clip on to the resistor under test (fig. 9-1). Cleanliness is important and if the sample is not clean, a rub with an abrasive paper to remove oxides is recommended.

c) It is not always possible to use the combined current and potential clips, in which case test leads with spade tags or special test fixtures may have to be made for the user to suit particular applications.

d) Fig. 9-2 illustrates connections to various types of test resistors.

e) When measuring 4-terminal resistance standards, do not use the combined current and potential probes. Make four separate connections to the current and potential terminals.

Fig. 9.1 Combined current and potential probes

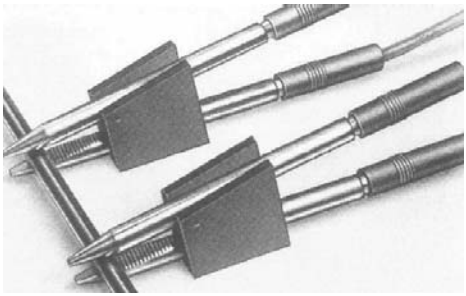

Fig. 9.2 Various types of resistors

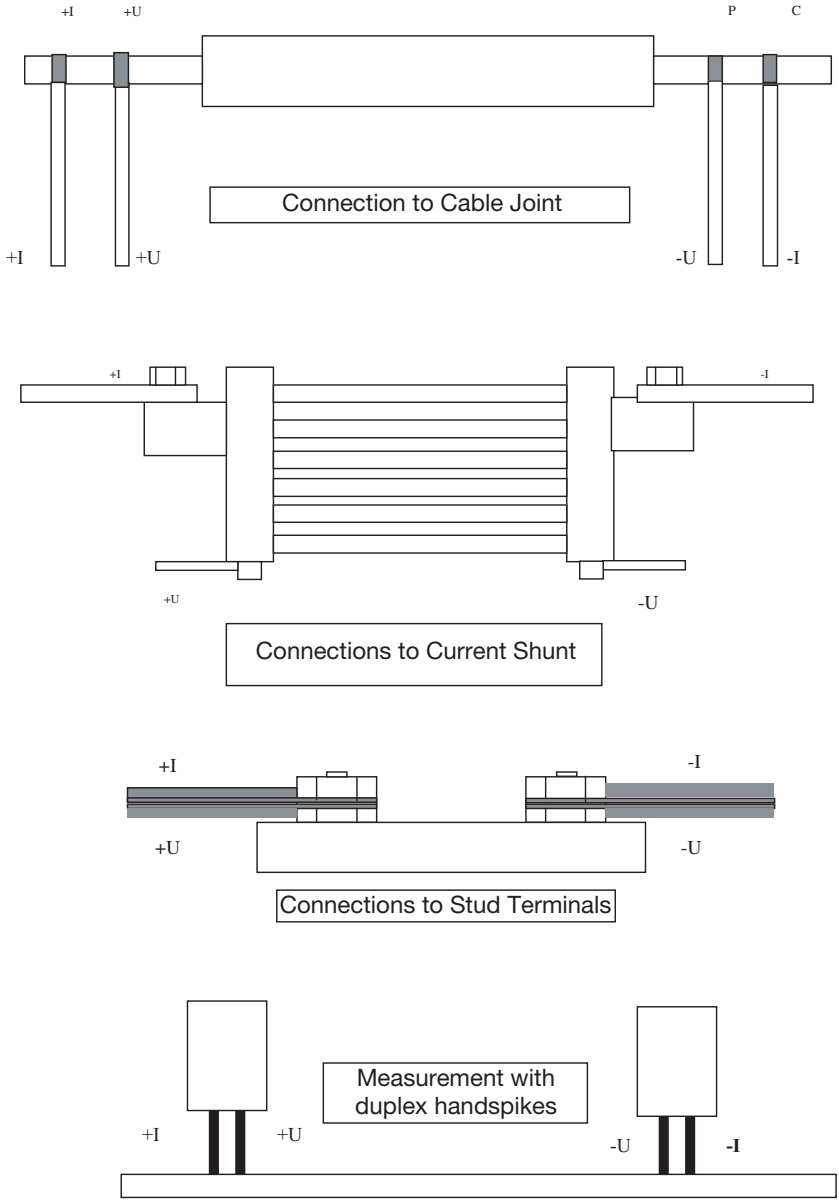

10. POWER UP

When the DO7 is first switched on, a lamp test is automatically performed. All display segments are illuminated followed by each LED lighting in sequence. NOTE the LOCK LED is not fitted and will therefore will NOT light. The microprocessor checks for correct internal operation and indicates "P" if all tests pass O.K. At the same time the software version will be displayed and held for approximately 2 seconds. The display will typically read "P 1.1". Should the internal checks indicate an error, then the display will read "HELP". Contact our Service Department or your local agent for assistance.

The DO7 will perform an automatic zero sequence and finally sets to the following default start-up mode ready for use. The selected measuring range will be 60Ω, and the DO7 will then be in stand-by mode.

11. MEASUREMENT

Connect the resistance to be measured (Rx) to the measuring terminals in accordance with the diagram on the instrument panel. Select the range required, the measurement mode, ie. +, - or average. The LED lamp will light to indicate which buttons are active. To initialise the measurement, press and hold the ON button, the measurement will cease once this button is released and the instrument will return to the STANDBY state. Should you wish to initialise a continuous reading, then press the LOCK + ON buttons. The measurement will continue until the STANDBY button is pressed or the ON button pressed again. An audible BLEEP will sound during this time to warn the operator that measurement is still in progress, and up to 10 Amps measuring current is draining the batteries.

DISPLAY HOLD FUNCTION

This works as follows:-

1. When returning to the STANDBY condition the LAST measured value will remain on DISPLAY for 30 SECONDS and then blank.
   This occurs when:
   - Pressing the STBY key, or
   - Releasing the momentary ON key, or
   - Releasing the momentary external footswitch.
2. Pressing any key (except LOCK) during the 30 second period will force the display to blank and allow normal operation to resume. It is recommended that the STBY key be pressed to carry out this function.

Over-Range

The display will indicate - - - -.
Select a higher range.

Open Circuit Lead

O/C LEAD will be displayed and the display will indicate - - - - if the instrument detects that the lead resistance is too high. The C terminals are checked for compliance voltage. Measurement should not be made if this warning message is displayed. This warning will also be displayed if the internal protection fuse is open-circuit. When in STANDBY mode this LED will always be lit.

Connections
When making good quality measurements, it is important to ensure that all measuring leads are in good condition, and less than 0.2 ohms resistance.

It should also be noted that some spade tags and crocodile clips can produce high thermal emfs when warmed, particularly nickel-plated brass types. This can cause problems when, for example, connecting too hot motor windings. The solution is to use plain copper or brass connections keeping them clean and oxide-free.

12. REMOTE
If a footswitch or other similar external switch is plugged into the REMOTE socket, it will behave as an ON key. This feature is particularly useful when used with the PRINT LAST function to enable "hands free" operation during measurement, with the results printed on an external printer. For switch connections see page 15.

13. PRINTER OUTPUT
The print format will be as follows:

SIGN	VALUE	UNIT (measuring mode)
example:	+ 600.0	m ohm (+ve)
	- 600.0	m ohm (-ve)
	600.0	m ohm (Ave)

The value printed will be followed by a line feed carriage return.

Should the instrument display read over-range then the value will be printed as
- - - -
For cable connection details see page 16.

Print All

All measured values will be sent to the printer port (RS232) when "ON". This key toggles ON/OFF.

Print Last

The last measured value only will be sent to the printer port (RS232). This is defined as the last value measured when switching from "ON" to "STBY". This key toggles ON/OFF.

Baud Rate

This key will display the currently set value when pressed. To change the value, press CLE to clear and then use the keyboard to enter the new value, finishing with OK. If the new entered value is a valid rate, then it will be stored and retained in the NVRAM. If it is invalid a long bleep will sound and it will reset to the last value. The valid Baud Rates are: 75, 110, 150, 300, 600, 1200, 2400, 4800, 9600, 19200. The format is fixed at 8-bit data, 1 start bit, 1 stop bit and no parity.

14. PROTECTION

Every effort has been made to protect the instrument against voltages being applied to the terminals. A large 6 Amp fuse is fitted internally to the C measuring line and a gas discharge tube, GDT, is across the C terminals. If voltages above approximately 90V are applied to the measuring terminals, the GDT will strike, effectively shorting the C terminals through the 6 Amp protective fuse, which will interrupt the circuit.

The fuse fitted will interrupt up to 40,000 Amps. The P terminals are not fused and will withstand up to 460 Volts without damage to the instrument.

WARNING!

To replace the protection fuse, the top instrument panel should be removed, but only after the mains supply and all input connections are removed. The protection fuse is located on the main printed circuit board. Only replace with the correct fuse rating.

15. CALIBRATION PROCESS

This procedure describes the standard calibration method for the DO7 Ohmmeter using Cropico Calibration Standard Type MTS2. If discrete resistance standards are to be used instead, refer to section 21 before proceeding.

If the calibration stores are to be pre-set or erased, use the special operation described in section 21 (CAL RESET).

CAUTION

The DO7 will be factory-calibrated to its full accuracy when delivered and any recalibration by the user will invalidate this initial calibration. The user should therefore be certain that only authorised and competent personnel are permitted access to the calibration facility, which is key protected.

16. EQUIPMENT REQUIRED

Cropico Calibration Standard Type MTS2
Set of 2 low thermal emf leads
Set of 2 general purpose leads (10A rating)
Calibration key no. 901

17. PREPARATION

17.1 Ensure all retaining screws are fitted.
Place unit in temperature controlled environment for a minimum of 4 hours. Ensure batteries are fully charged.

17.2 Connect each of the four DO7 terminals to the equivalent terminals on the calibration Standard. It is essential that low thermal emf leads are used for the P1 and P2 leads (see Fig.17.1 for the preferred setup).

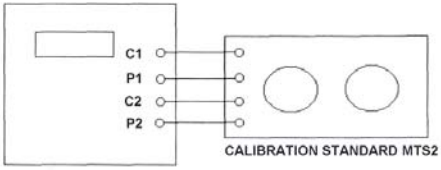

P1, P2 LEADS - PURE COPPER, MULTI STRANDED

C1, C2 LEADS - 10A RATING (55/0.15mm)

17.3 The DO7 is powered by internal batteries and these should be fully charged before carrying out calibration. The mains charger can be left connected, if desired.

17.4 Set the calibration rig to 40 Ohm, Zero.

17.5 Turn the DO7 power ON. If the "HELP" message is displayed, carry out the CAL RESET operation of section 21 before continuing.

17.6 Leave for a few minutes to stabilise.

18. CALIBRATION

18.1 Insert the calibration key into the panel switch and turn to CAL. The CAL LED should light up.

18.2 Set the calibration Standard to 40 Ohm, Zero.

18.3 Set the DO7 to 60 Ohm range, +ve, and press LOCK+ON.

18.4 When the reading has settled, press KYB. The display should read 0.

Press OK. The LED should light up for about 3 sec.

The reading should now be 0.00 +/-1 digit. If not, repeat this step.

18.5 Set the calibration Standard to +FS.

18.6 When the reading has settled, press KYB.

Enter the value 40 using the keypad and press OK. The LED should light up for about 3 sec.

The reading should now be 40.00 +/-1 digit. If not, repeat this step.

18.7 Repeat steps 18.2 thru' 18.6 for the remaining ranges.

18.8 Turn the panel switch to RUN and remove the key.

19. VERIFICATION

19.1 Ensure that the panel switch is set to RUN and the calibration key is removed.

19.2 Set the calibration rig to 40 Ohm, Zero.

19.3 Set the DO7 to 60 Ohm range, +ve, and press LOCK+ON. Wait for the reading to settle.

The reading should be 0.00 +/-1 digit. Note the actual reading in the Calibration Test Results sheet.

19.4 Set the calibration rig to +FS and wait for the reading to settle.

The reading should be 40.00 +/-1 digit. Note the actual reading in the Calibration Test Results sheet.

19.5 Set the DO7 to -ve and wait for the reading to settle.

The reading should be -40.00 +/-1 digit. Note the actual reading in the Calibration Test Results sheet.

19.6 Set the DO7 to AVE and wait for the reading to settle.

The reading should be 40.00 +/-1 digit. Note the actual reading in the Calibration Test Results sheet.

19.7 Reset the DO7 to +ve. Set the calibration rig to 4 Ohm, +FS and wait for the reading to settle.

The reading should be 4.00 +/-1 digit. Note the actual reading in the Calibration Test Results

19.8 Set the calibration rig to 400m Ohm, +FS and wait for the reading to settle.

The reading should be 0.40 +/-1 digit. Note the actual reading in the Calibration Test Results sheet.

19.9 Set the calibration rig to 40m Ohm, +FS and wait for the reading to settle.

The reading should be 0.04 +/-1 digit. Note the actual reading in the Calibration Test Results sheet.

19.10 Repeat steps 5.2 thru' 5.6 for the remaining ranges.

19.11 Turn the DO7 power OFF and remove the test leads.

19.12 Affix a calibration seal label to the instrument.

19.13 Sign and date the Calibration Test Results sheet.

* * END OF NORMAL CALIBRATION PROCEDURE * *

20. USING DISCRETE RESISTANCE STANDARDS

20.1 Discrete, 4-terminal resistance standards may be used in place of the Cropico Calibration Standard. The standards must have an uncertainty better than 0.01% if the full calibration accuracy is to be achieved. Full consideration of the DO7 measuring current must also be taken into account when selecting the standards. The DO7 can be calibrated to standards between 1000 and 6000 digits for each range using the KYB entry. However, full accuracy will only be achieved if standards of 4000 to 6000 digits are used.
The following nominal standards are recommended:

40, 4, 400m, 40m, 4m and 400u Ohm

20.2 In all measurements the P1 and P2 terminals are conventionally connected. Bear in mind that thermal emfs may be present. The DO7 is particularly sensitive to these on the 600u Ohm range.

20.3 For FS measurements, connect the C1 and C2 leads in the conventional manner (see Fig 20.1).

20.4 For ZERO measurements, connect the C1 and C2 leads to the C2 terminal of the standard (see Fig 20.2).

FULL SCALE CALIBRATION

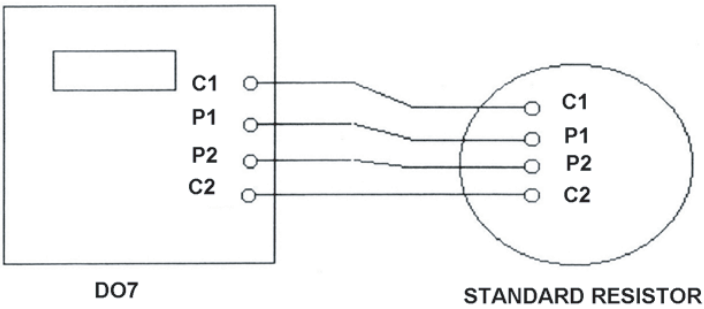

P1, P2 LEADS - PURE COPPER, MULTI STRANDED
C1, C2 LEADS - 10A RATING (55/0.15mm)

Fig. 20.1

ZERO CALIBRATION

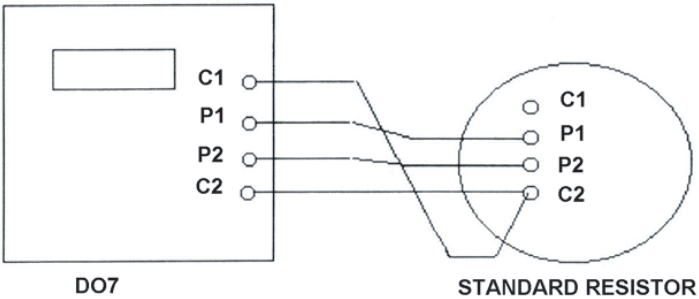

P1, P2 LEADS - PURE COPPER, MULTI STRANDED
C1, C2 LEADS - 10A RATING (55/0.15mm)

Fig. 20.2

** *END OF TEST PROCEDURE* **

SPECIAL OPERATION - CAL RESET

21.1 This part of the procedure is used to pre-set the calibration memory to a default condition. It will erase all previous calibration data. With Ver 1.X software, this feature can only be used if a calibration memory failure has been detected. This test is performed at power-up and failure is indicated by the HELP message.

21.2 Turn the DO7 power ON. Wait for the display test to complete and the HELP message to appear.

21.3 Insert the calibration key into the panel switch and turn to CAL. The CAL LED on the front panel should light up.

21.4 Press CLE. The LED should light up for about 1 sec.

21.5 The HELP message should now be replaced by the normal display.

21.6 Turn the panel switch to RUN and remove the key.

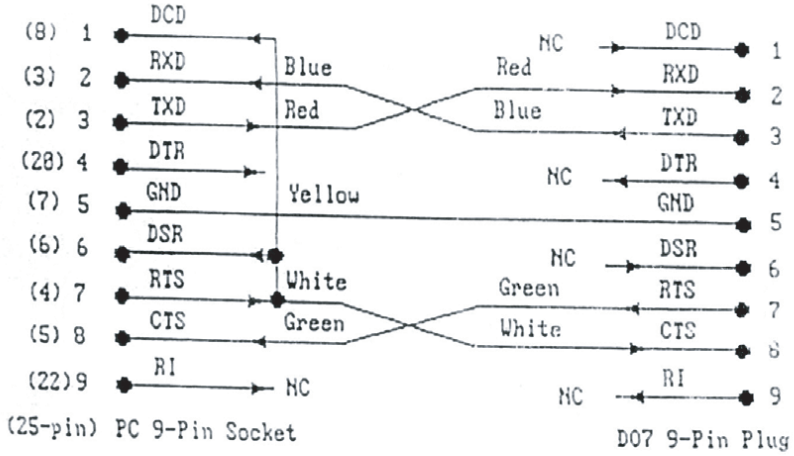

REMOTE START

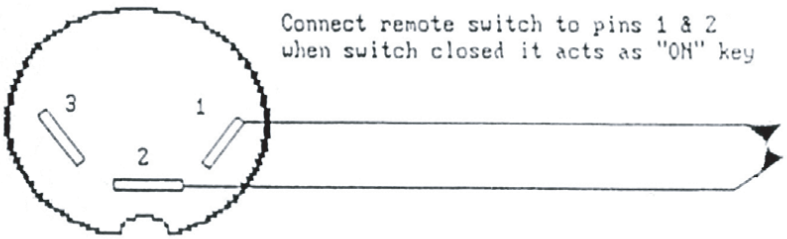

22. AVAILABLE ACCESSORIES

LEADSETS

HSO1	Duplex Handspikes with 3 metre leads
HSO1-RS	Duplex Handspikes as HSO1 but with remote start button fitted
HSO2	Duplex handspikes with 3 metre and 15 metre leads
HSO2-RS	Duplex Handspikes as HSO2 but with remote start button fitted
LSO3	Large Kelvin clips with 3 metre leads – accept cables and bars up to 38mm diameter
LSO4	As LSO3 but with 3 metre leads and 15 metre lead lengths

OTHER ACCESSORIES

FSO1	Foot Switch for remote start
PRO1	Portable thermal Printer
CO2	1 Metre Cable Clamp – Metal Base
CBO2	Lead Bag attaches to lid
RS101	RS232 Cable
CO2A	Cable Clamp with Metal Base, for larger cables
CH01	Concentric Handspikes
MTS2	Calibration Standard
CO3	Cable Clamp with incorporated Water bath
CB03	Carry Bag for Lead Sets

For Technical Support Contact:

Tel: +44 (0) 191 587 8718

For Service and Calibration Contact:

Service Department
Seaward Group
Unit 11
Bracken Hill
South West Industrial Estate
Peterlee
Co Durham
SR8 2LS
England

Tel: +44 (0) 191 587 8739
Fax: +44 (0) 191 587 8737
E-mail: service@seaward.co.uk

CROPICO is a division of

SEAWARD GROUP

Additional Products From Cropico

DIGITAL OHMMETERS

RESISTANCE BRIDGES

RESISTANCE DECADE BOXES

RESISTANCE STANDARDS

DIGITAL THERMOMETERS

THERMOCOUPLE SIMULATORS

PT100 SIMULATORS

INSULATION TEST SETS

UNIVERSAL CALIBRATORS

HIPOT TESTERS

ELECTRICAL SAFETY TESTERS

CROPICO

Phone, fax or e-mail for further information on the above or for a copy of our general catalogue: - Phone: - +44 (0) 191 5863511
Fax: - +44 (0) 191 5860227
E-mail:- **sales@cropico.com**
Website: - **www.cropico.com**